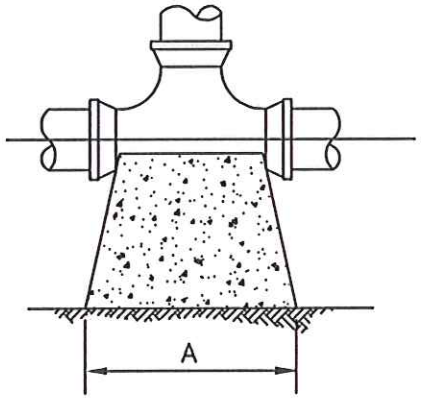

TEE

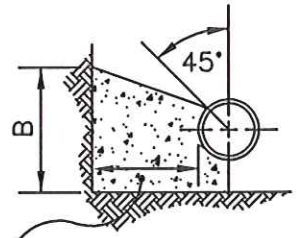

24" MIN–12" & LARGER PIPE
18" MIN–10" & SMALLER

BENDS & TEE

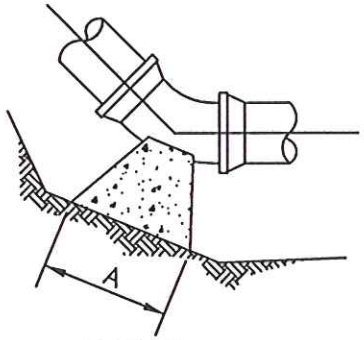

BEND

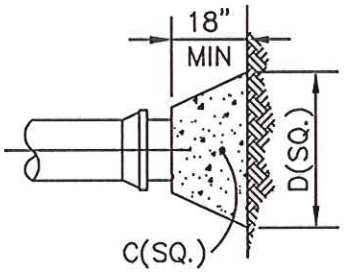

PLUG

SIZE	90° BEND		45° BEND		22½° BEND		TEES		PLUGS	
	A	B	A	B	A	B	A	B	C	D
4" / 6"	16"	10"	9"	10"	6"	8"	10"	12"	10"	21"
8"	22"	13"	12"	13"	8"	10"	13"	16"	12"	29"
10"	26"	17"	14"	17"	10"	13"	16"	20"	14"	36"
12"	29"	21"	16"	21"	11"	16"	18"	24"	16"	41"
14"	35"	24"	19"	24"	12"	20"	22"	27"	18"	48"
16"	38"	27"	21"	27"	12"	24"	24"	30"	20"	54"
24"	48"	40"	30"	40"	20"	30"	36"	48"	36"	72"

THRUST BLOCKS SHALL BE CAST IN PLACE AGAINST UNDISTURBED EARTH WALL. PLACE 15 lb. FELT BETWEEN CONCRETE BLOCKING AND PIPE/FITTING TO AVOID BONDING.

THRUST BLOCK DETAIL
City of Webster, Texas

N.T.S.	WATER APPENDIX 1
	Prepared by: GIS Div.
Webster	Checked by: S. Hicks, P.E.
	Date: 4/4/2011

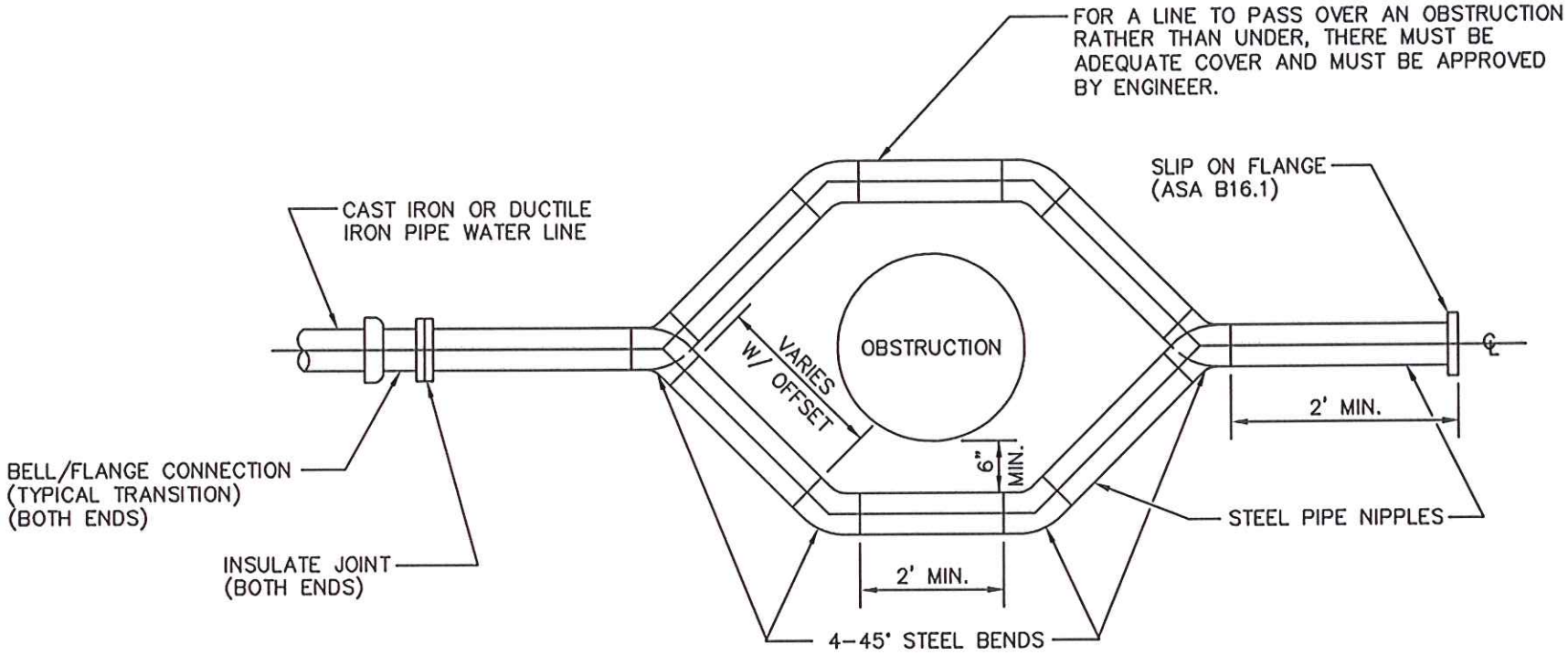

NOTE: CONTRACTOR HAS OPTION OF USING SAME MATERIAL (IF APPROVED) AS EXISTING WATER LINE WITH PROPER FITTINGS FOR WATER LINE LOWERING.

WATER LINE LOWERING DETAIL

City of Webster, Texas

N.T.S.	WATER APPENDIX 2
	Prepared by: GIS Div.
Webster	Checked by: S. Hicks, P.E.
	Date: 4/4/2011

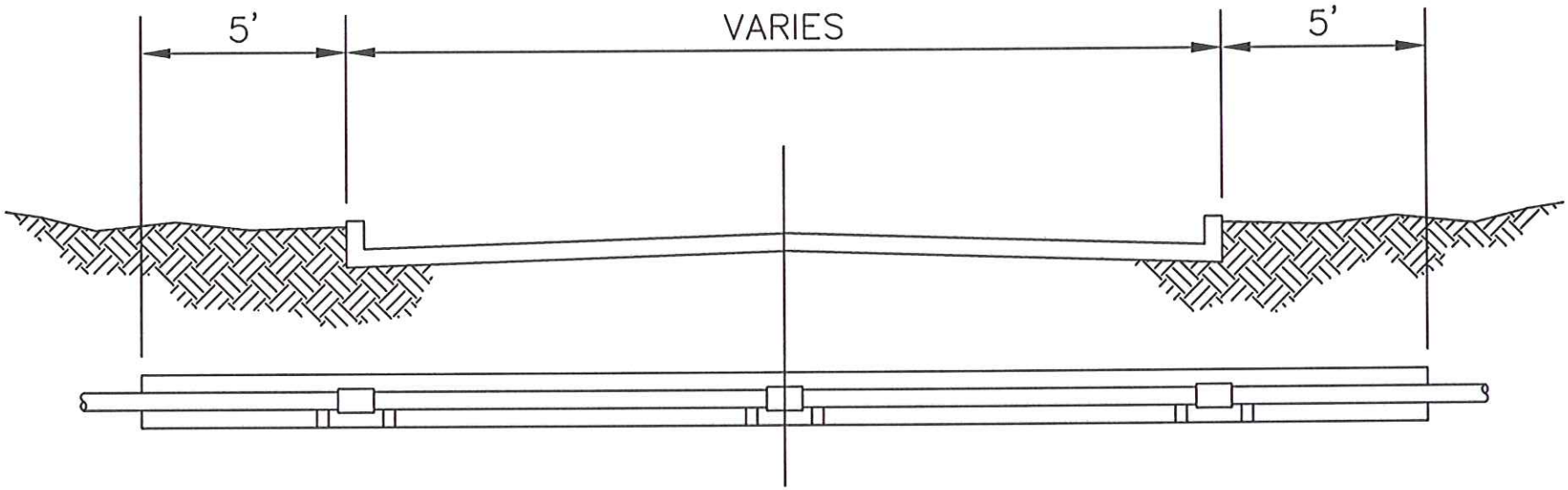

HIGHWAY CROSSING DETAIL

City of Webster, Texas

N.T.S.	WATER APPENDIX 3
	Prepared by: GIS Div.
Webster	Checked by: S. Hicks, P.E.
	Date: 4/4/2011

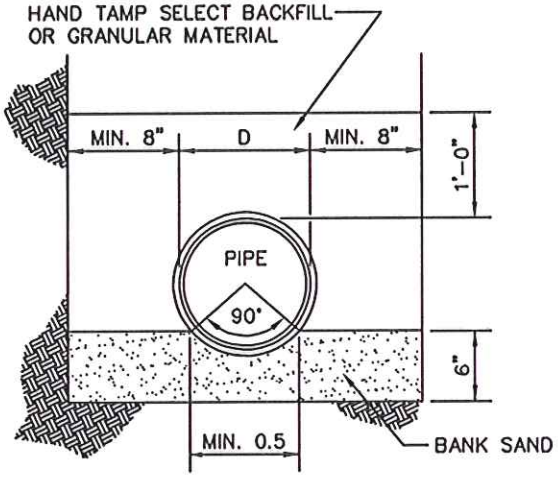

GRADED AREA

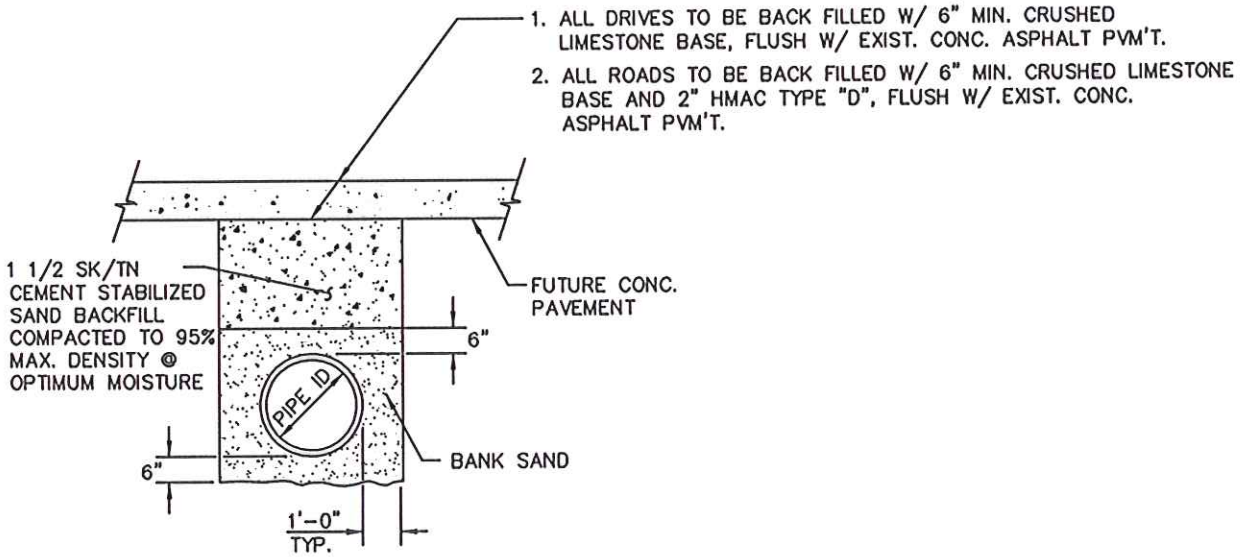

PAVED AREA

WATER PIPE BEDDING DETAIL

City of Webster, Texas

N.T.S.	WATER APPENDIX 4
	Prepared by: GIS Div.
Webster	Checked by: S. Hicks, P.E.
	Date: 4/4/2011

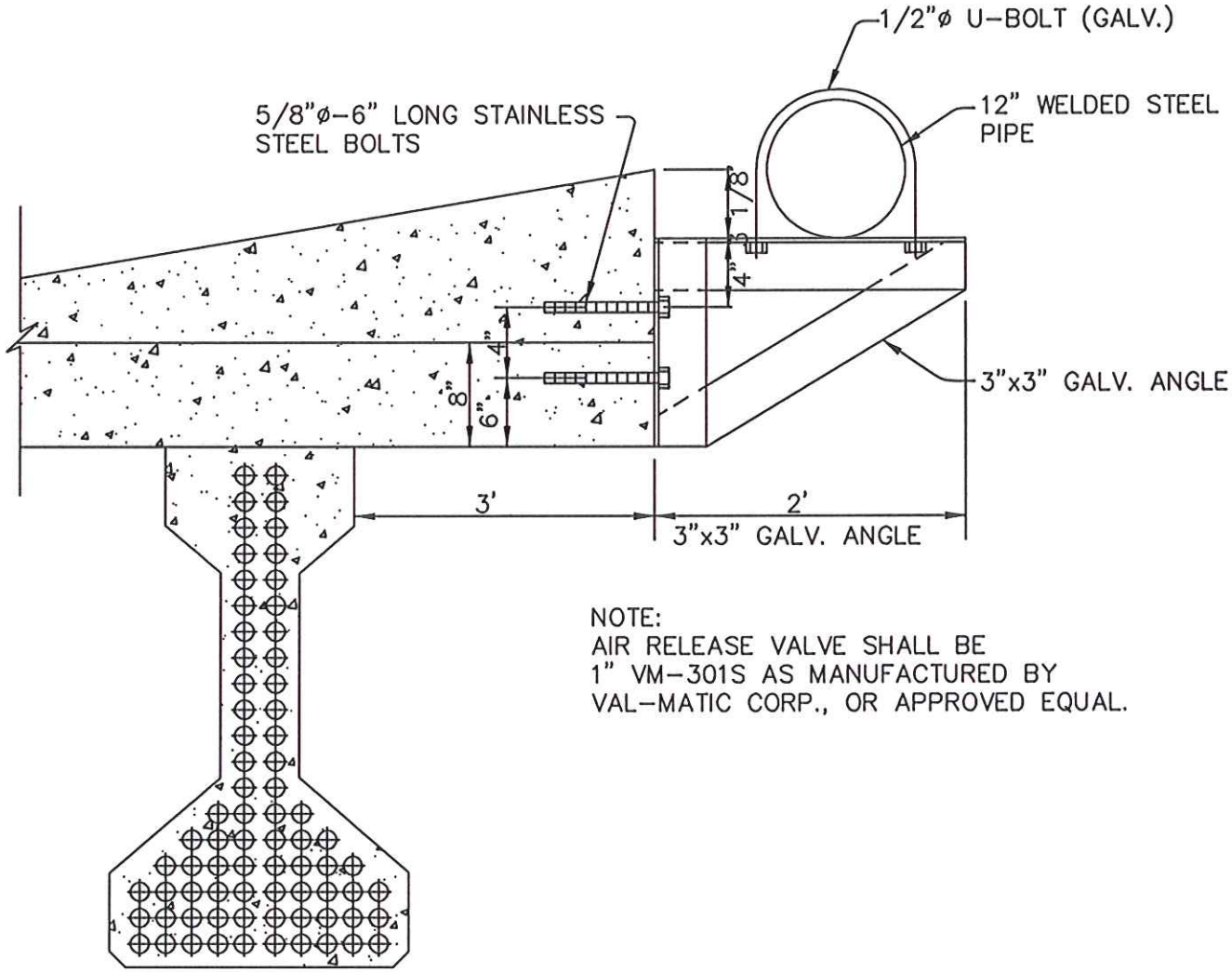

NOTE:
AIR RELEASE VALVE SHALL BE
1" VM-301S AS MANUFACTURED BY
VAL-MATIC CORP., OR APPROVED EQUAL.

PIPE SUPPORT BRACKET DETAIL

City of Webster, Texas

N.T.S.	WATER APPENDIX 5
	Prepared by: GIS Div.
Webster	Checked by: S. Hicks, P.E.
	Date: 4/4/2011

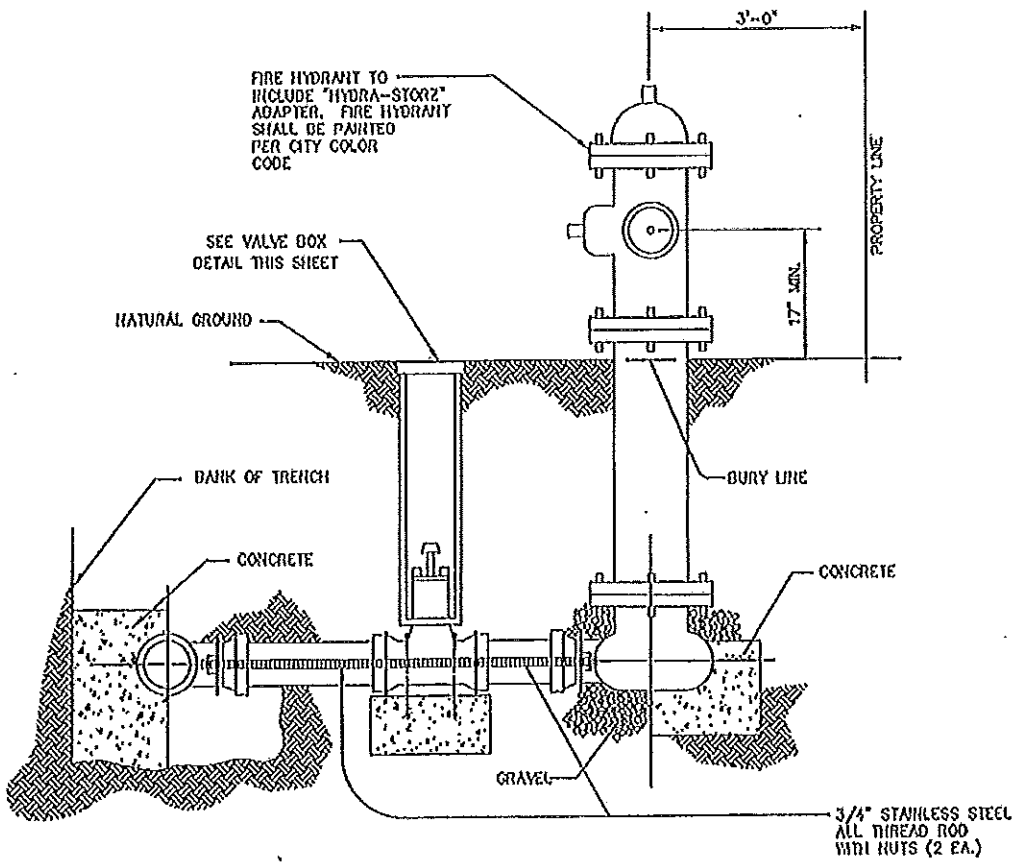

NOTE: Fire hydrant shall be EJ 5CD250 Watermaster hydrant with with integral 5-inch Harrington Storz nozzle, with stainless steel upper and lower shafts or approved equal.

FIRE HYDRANT – ELEVATION DETAIL
City of Webster, Texas

N.T.S.	WATER APPENDIX G
	Prepared by: GIS Div.
Webster	Checked by: S. Hicks, P.E.
	Date: 04/04/2011

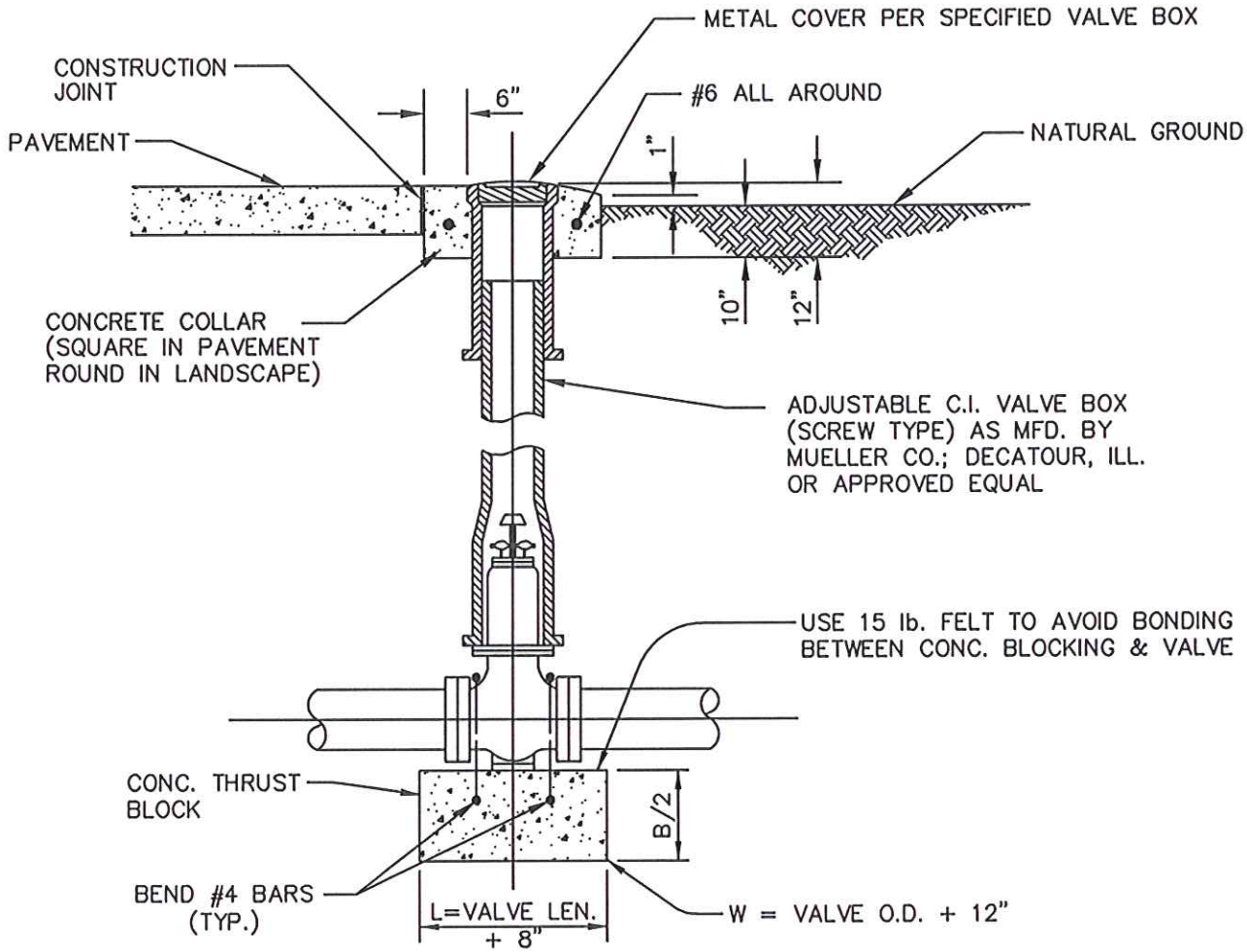

GATE VALVE BOX DETAIL

City of Webster, Texas

N.T.S.	WATER APPENDIX 7
	Prepared by: GIS Div.
Webster	Checked by: S. Hicks, P.E.
	Date: 4/4/2011

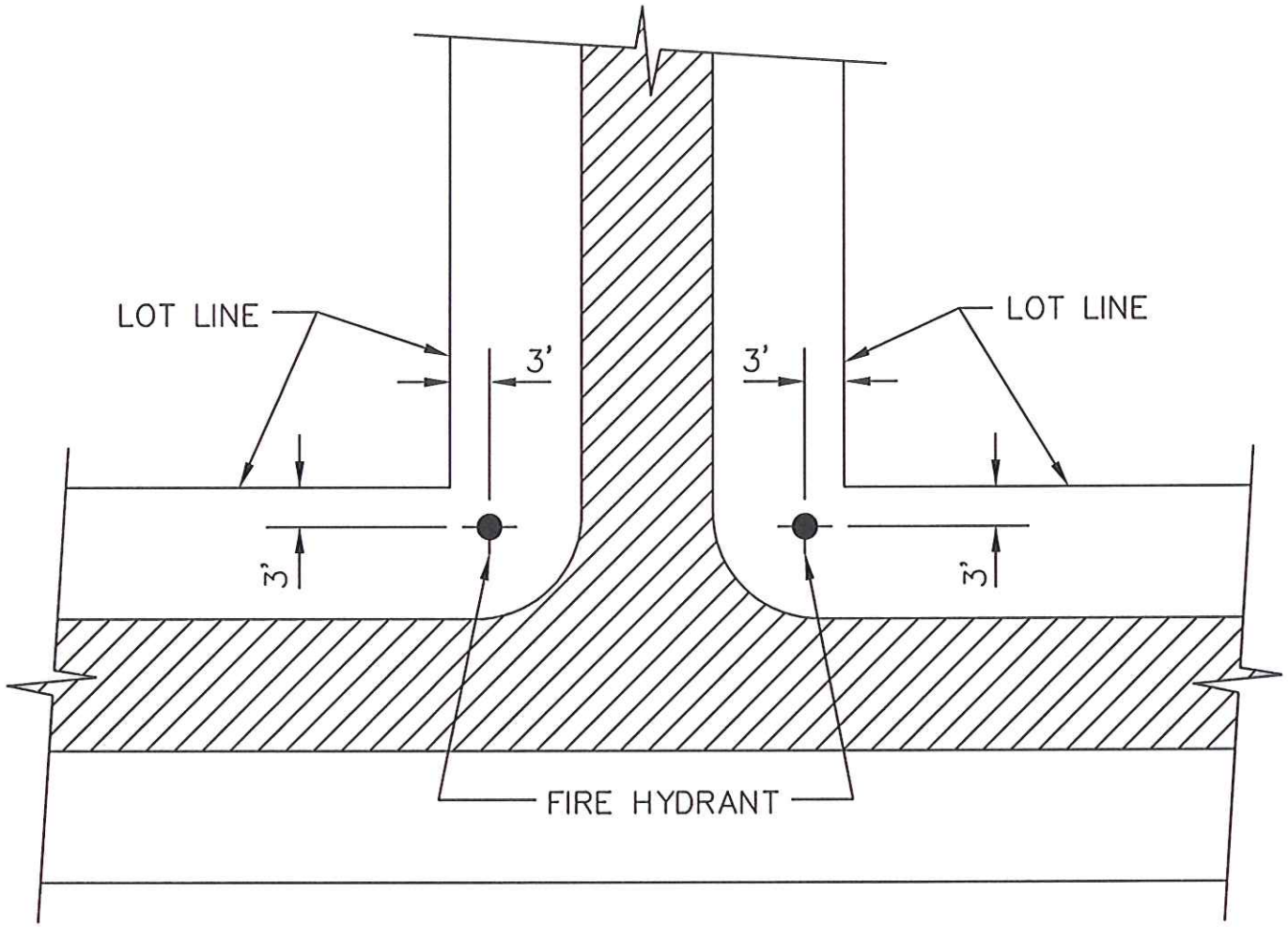

FIRE HYDRANT LOCATION DETAIL
City of Webster, Texas

N.T.S.	WATER APPENDIX 8
	Prepared by: GIS Div.
Webster	Checked by: S. Hicks, P.E.
	Date: 04/04/2011

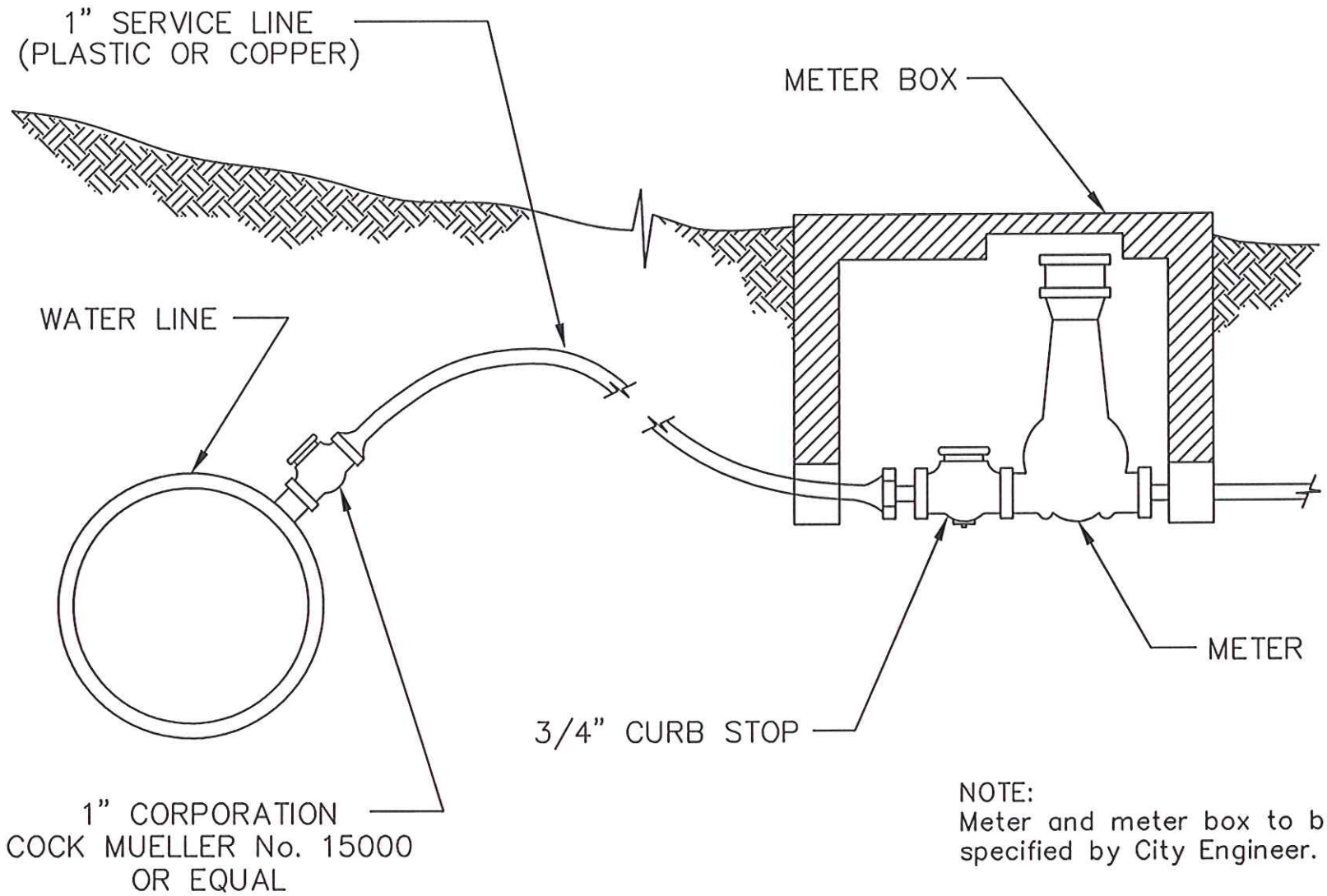

NOTE:
Meter and meter box to be specified by City Engineer.

SERVICE CONNECTION DETAIL
City of Webster, Texas

N.T.S.	WATER APPENDIX 9
	Prepared by: GIS Div.
Webster	Checked by: S. Hicks, P.E.
	Date: 4/4/2011