SANITARY SEWER

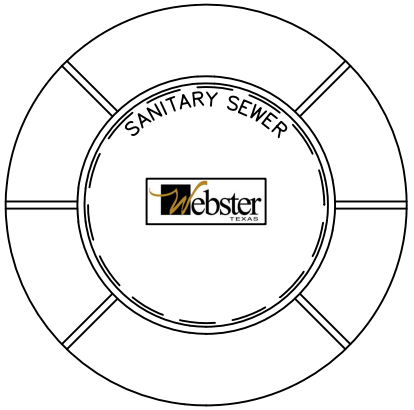


NOTES:

1. NECESSITY FOR USE OF THIS SECTION TO BE DETERMINED BY THE ENGINEER AS CONSTRUCTION PROGRESSES AND MAY BE MOD-IFIED BY HIM TO SUIT CONDITIONS ENCOUNTERED.
2. WELL POINTS TO BE INSTALLED AND TRENCH PUMPED DRY DURING EXCAVATION AND KEPT DRY DURING CONSTRUCTION AND UNTIL BACKFILL IS COMPLETELY PLACED AND CERTAIN TIME AS APPROVED BY ENGINEER HAS ELAPSED.

NOTE:
MANHOLE FRAME AND COVER TO BE MABRY PATTERN NO. BF-22-17, NEENAH, OR OTHER APPROVED EQUAL. WHERE SEWER IS LOCATED IN EASEMENTS, CONTRACTOR MAY USE LIGHTWEIGHT F & C, APPROVED BY THE ENGINEER.

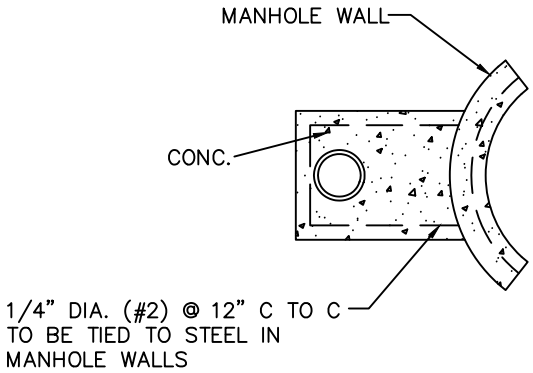


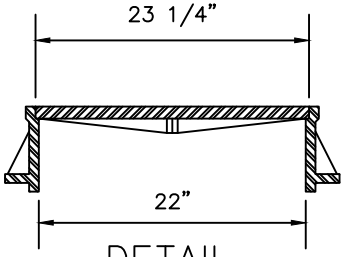


DETAIL
MANHOLE FRAME
AND COVER

| | | |
|---|---|---|
| MANHOLE FRAME AND COVER DETAIL<br>City of Webster, Texas | N.T.S. | SANITARY APPENDIX 1 |
| | | Prepared by: R.PARKIN, GIS |
| | | Checked by: K. MEARS, P.E. |
| | | Date: 06/14/2022 |

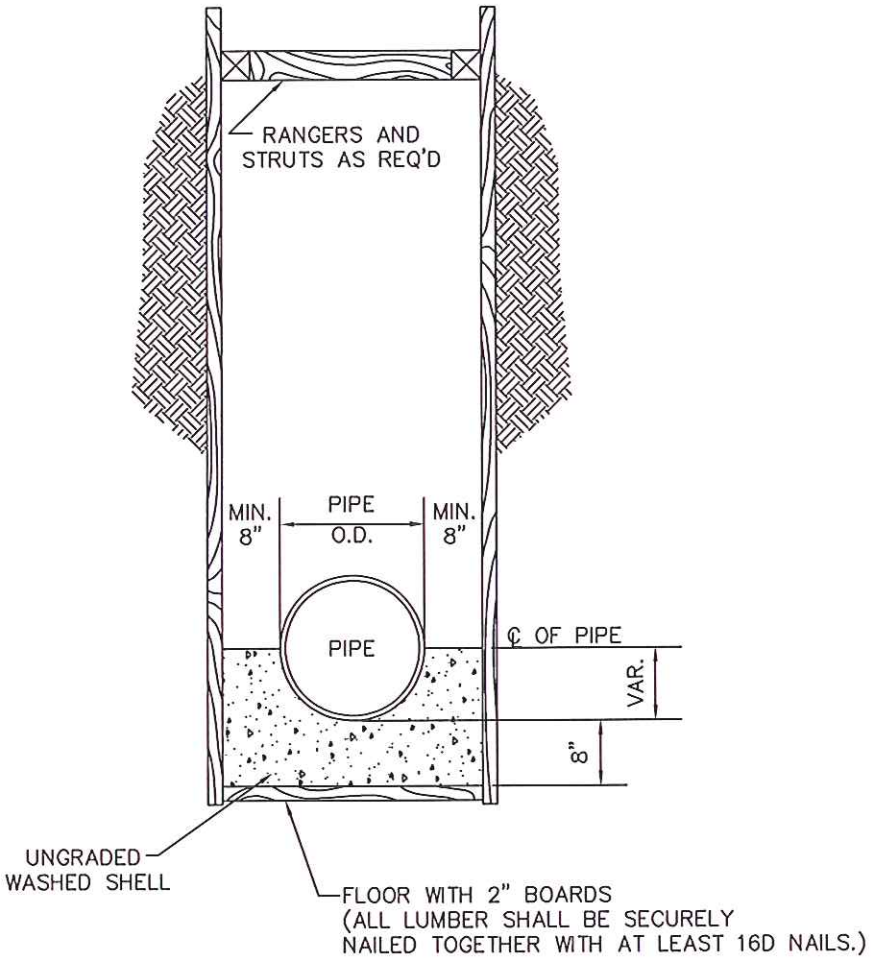


# TYPICAL DETAIL
# WET SAND CONSTRUCTION

| | | |
|---|---|---|
| TYPICAL WET SAND CONSTRUCTION DETAIL<br>City of Webster, Texas | N.T.S. | SANITARY APPENDIX 2 |
| | | Prepared by: GIS Div. |
| | Webster | Checked by: S. Hicks, P.E. |
| | | Date: 04/04/2011 |

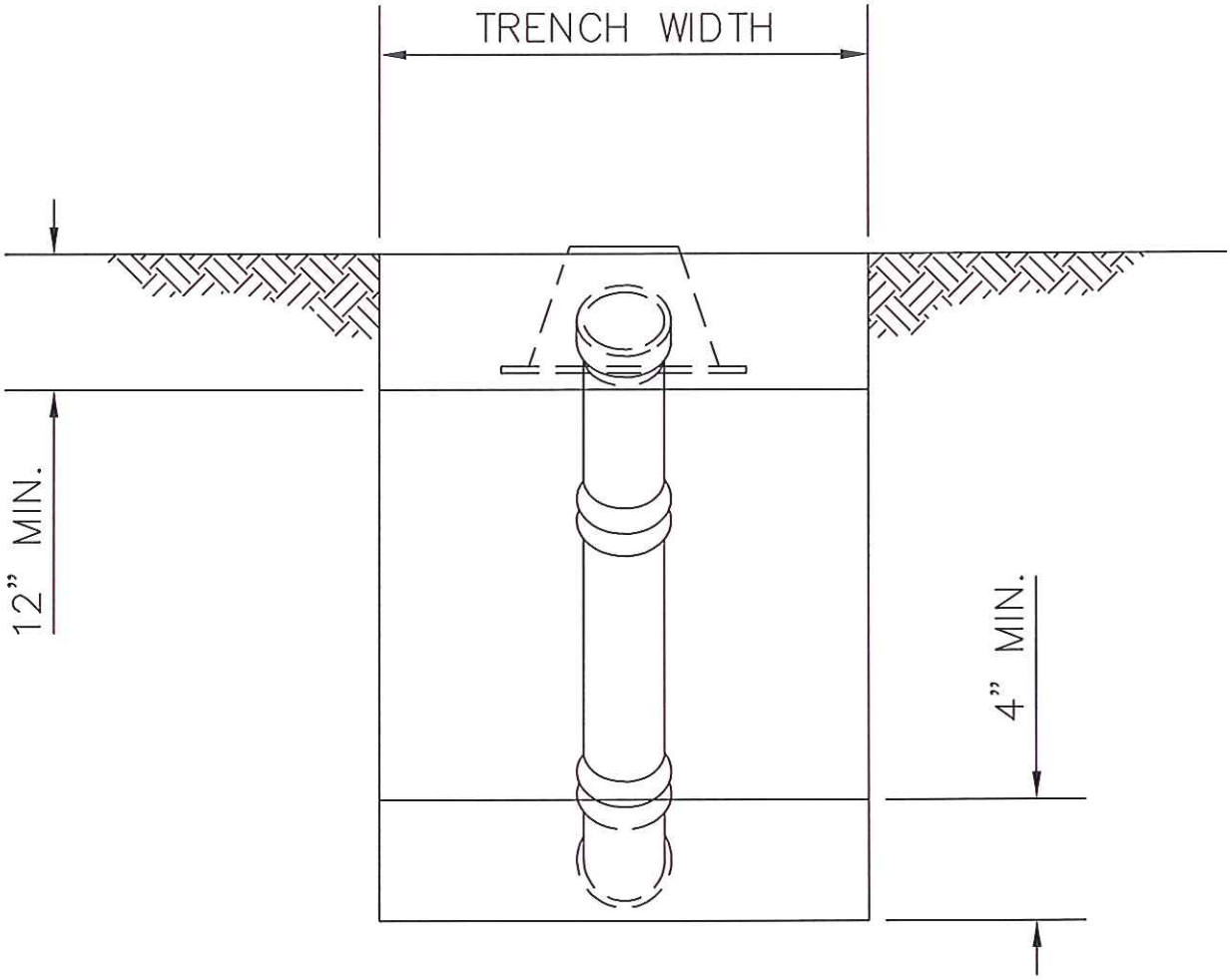


SECTION "B–B"

SECTION "B–B" DETAIL
City of Webster, Texas

| | |
|---|---|
| N.T.S. | SANITARY APPENDIX 3 |
| | Prepared by: GIS Div. |
| Webster | Checked by: S. Hicks, P.E. |
| | Date: 04/04/2011 |

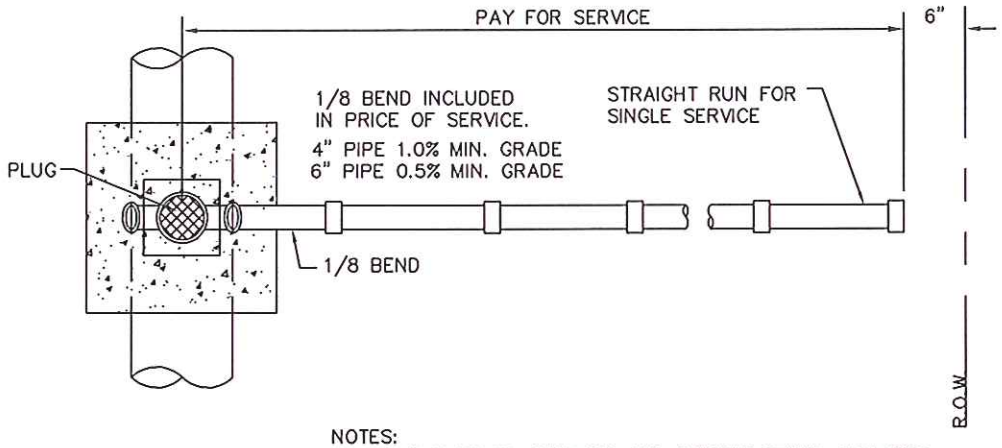


NOTES:
ALL SINGLE SEWER SERVICES AND DOUBLE SEWER SERVICES, AS SHOWN, ARE INTERCHANGEABLE, AS REQUIRED, TO CONNECT WITH STACKS, DOUBLE WYES AND WYES, AS REQUIRED, TAPS FOR PVC PIPE TO BE PVC "T" OR "Y" SADDLE.

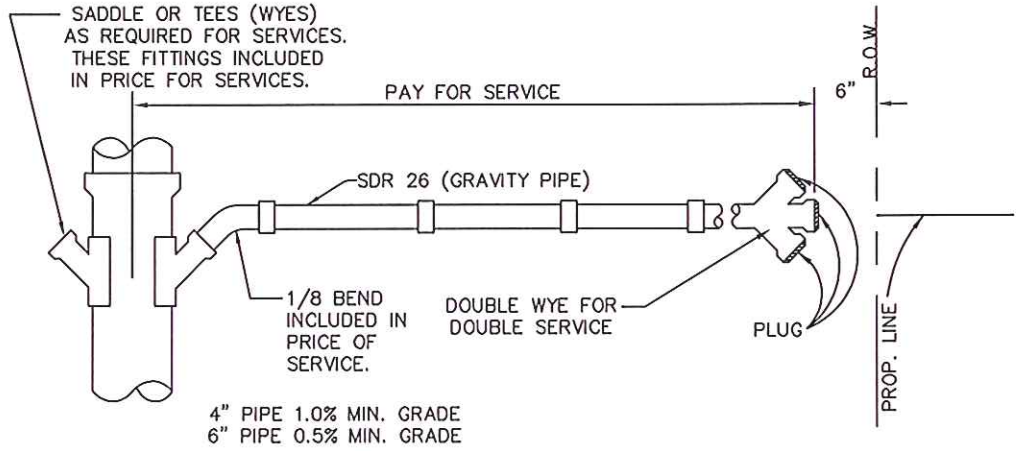


## PLAN
## SANITARY SEWER SERVICE

| | | |
|---|---|---|
| PLAN SANITARY SEWER SERVICE DETAIL<br>City of Webster, Texas | N.T.S. | SANITARY APPENDIX 4 |
| | | Prepared by: GIS Div. |
| | Webster | Checked by: S. Hicks, P.E. |
| | | Date: 04/04/2011 |

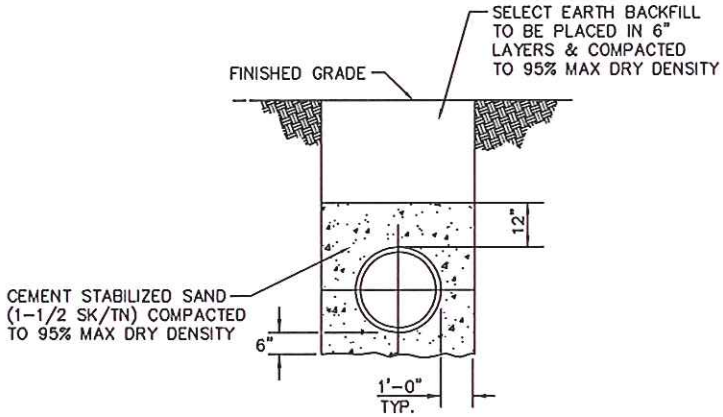


GRADED AREA

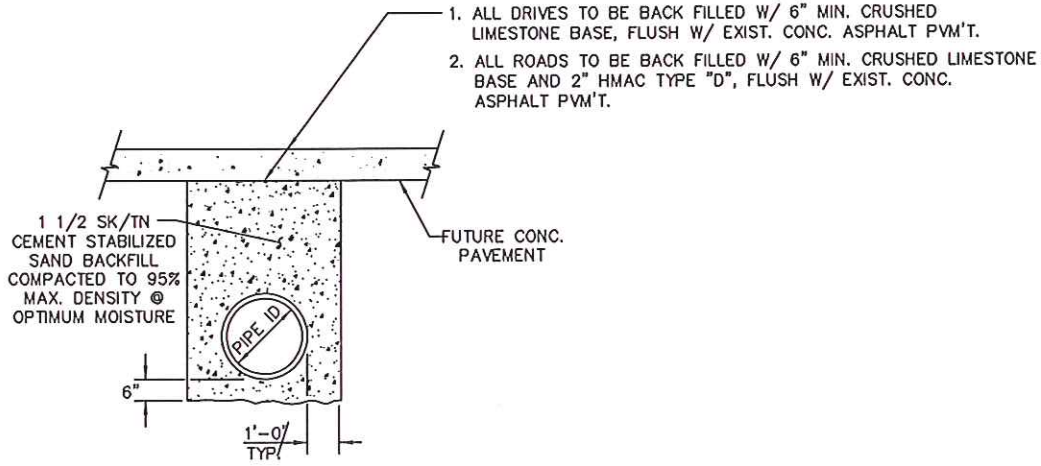


PAVED AREA

PIPE BEDDING DETAIL
GRAVITY SEWER

| | | |
|---|---|---|
| GRAVITY SEWER PIPE BEDDING DETAIL<br>City of Webster, Texas | N.T.S. | SANITARY APPENDIX 5 |
| | | Prepared by: GIS Div. |
| | Webster | Checked by: S. Hicks, P.E. |
| | | Date: 04/04/2011 |

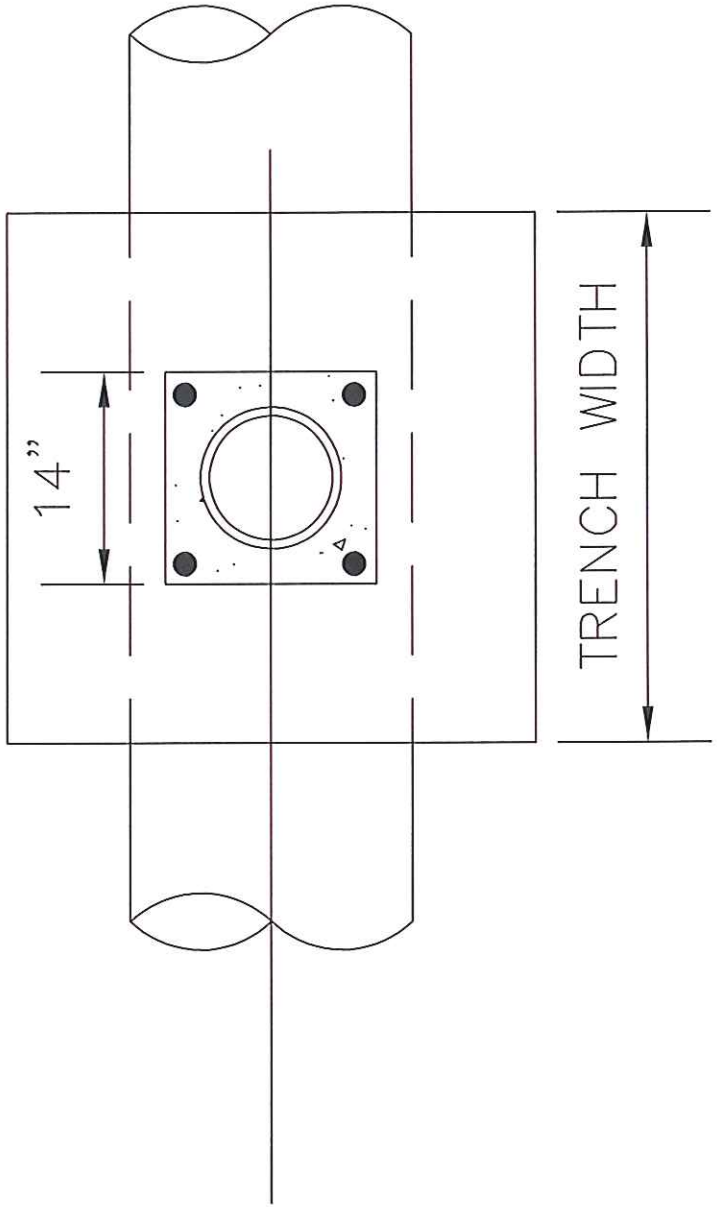


SECTION "C–C" DETAIL
City of Webster, Texas

| | |
|---|---|
| N.T.S. | SANITARY APPENDIX 6 |
| | Prepared by: GIS Div. |
| Webster | Checked by: S. Hicks, P.E. |
| | Date: 04/04/2011 |

NOTE:
All manholes must have an antimicrobial additive to render the concrete uninhabitable for bacteria growth. The additive shall be "ConmicShield" or an approved equal.

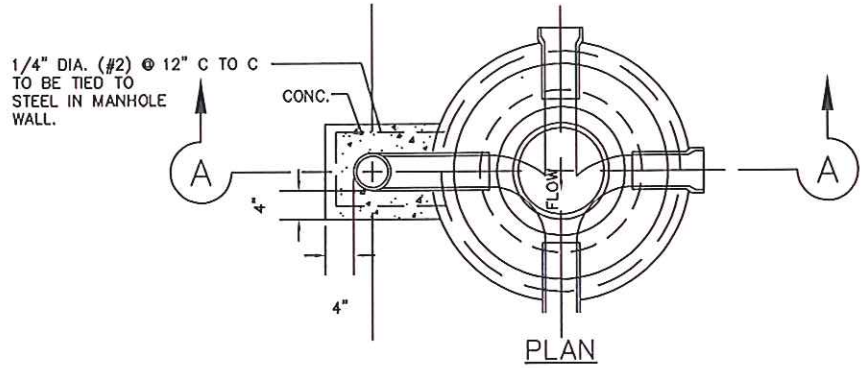


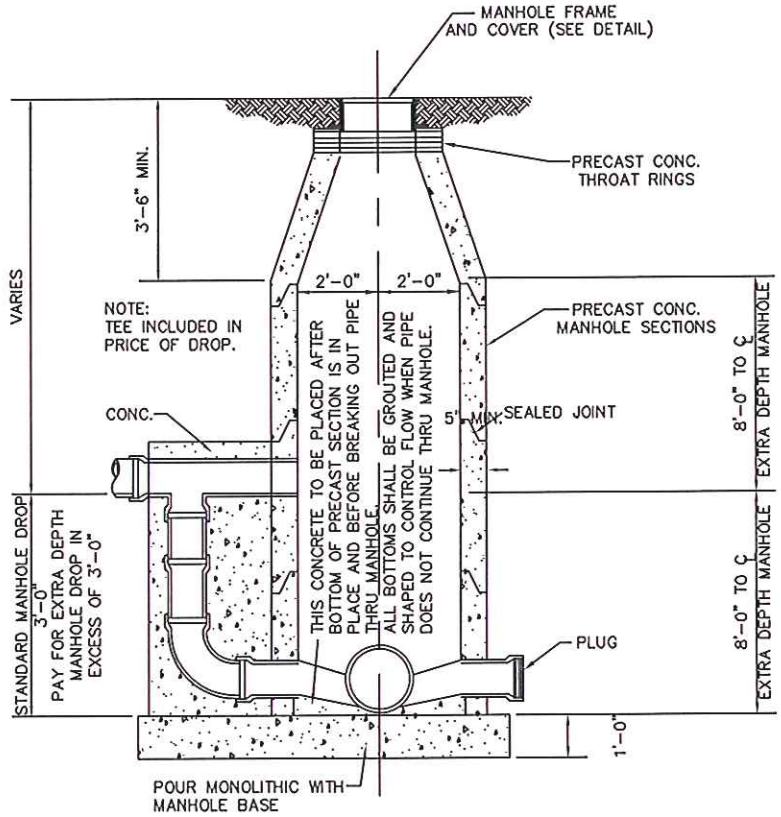


STANDARD PRECAST CONCRETE SEWER MANHOLE AND STANDARD DROP
City of Webster, Texas

| | |
|---|---|
| N.T.S. | SANITARY APPENDIX 7 |
| | Prepared by: GIS Div. |
| Webster | Checked by: S. Hicks, P.E. |
| | Date: 04/04/2011 |

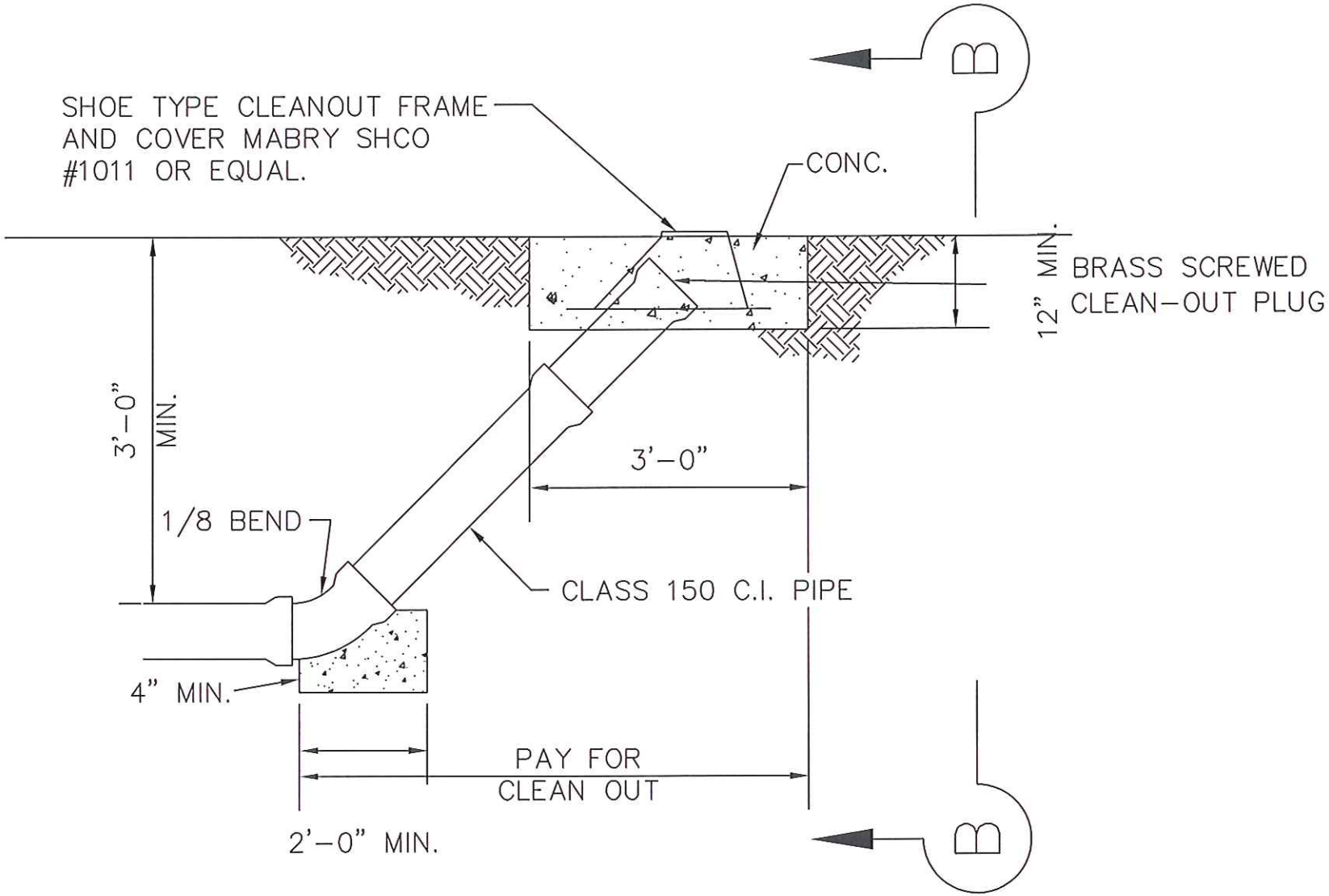


STANDARD SANITARY SEWER CLEANOUT DETAIL
City of Webster, Texas

| | |
|---|---|
| N.T.S. | SANITARY APPENDIX 8 |
| | Prepared by: GIS Div. |
| Webster | Checked by: S. Hicks, P.E. |
| | Date: 04/04/2011 |

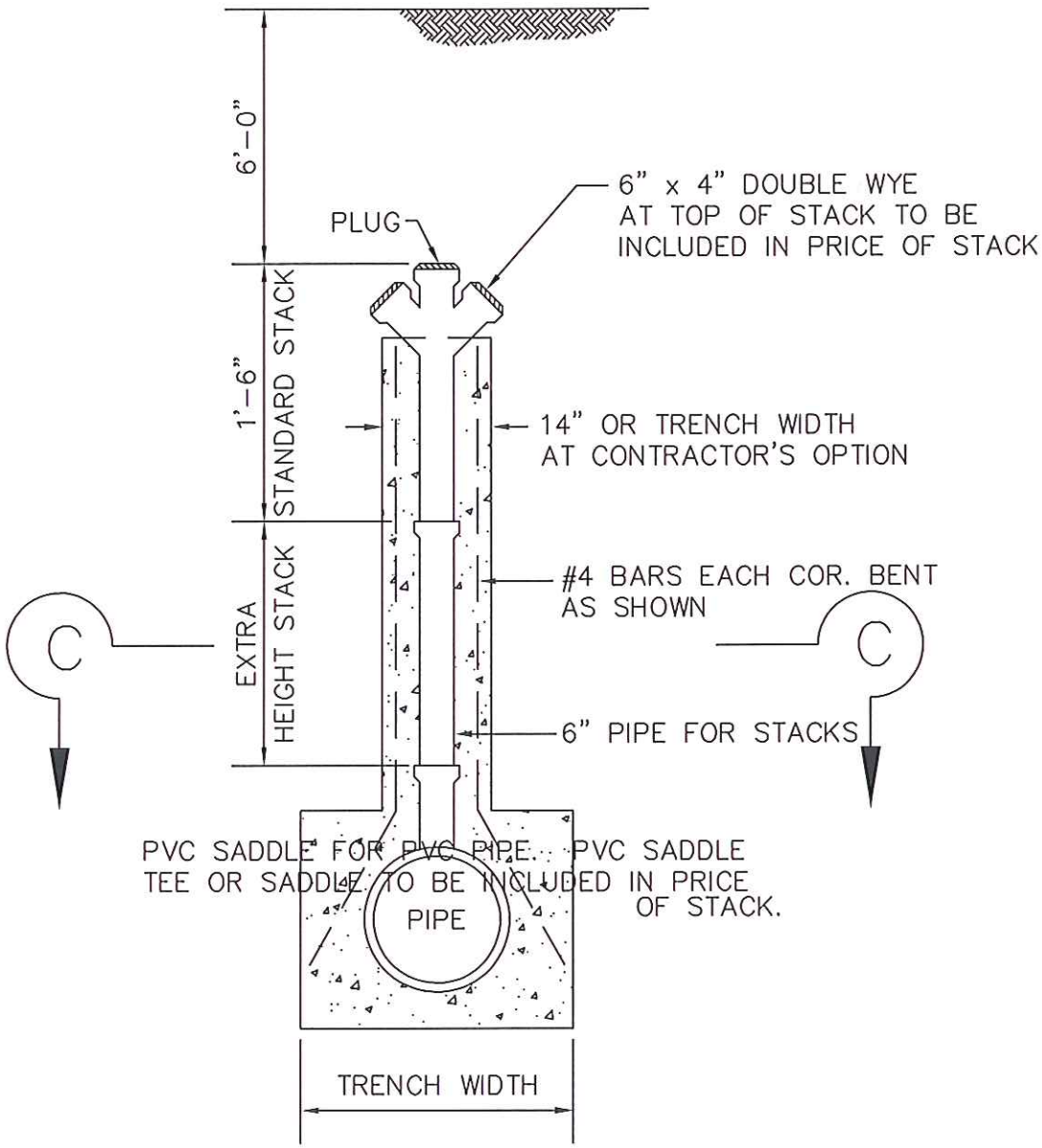


SANITARY SEWER STACK DETAIL
City of Webster, Texas

| | |
|---|---|
| N.T.S. | SANITARY APPENDIX 9 |
| | Prepared by: GIS Div. |
| Webster | Checked by: S. Hicks, P.E. |
| | Date: 04/04/2011 |